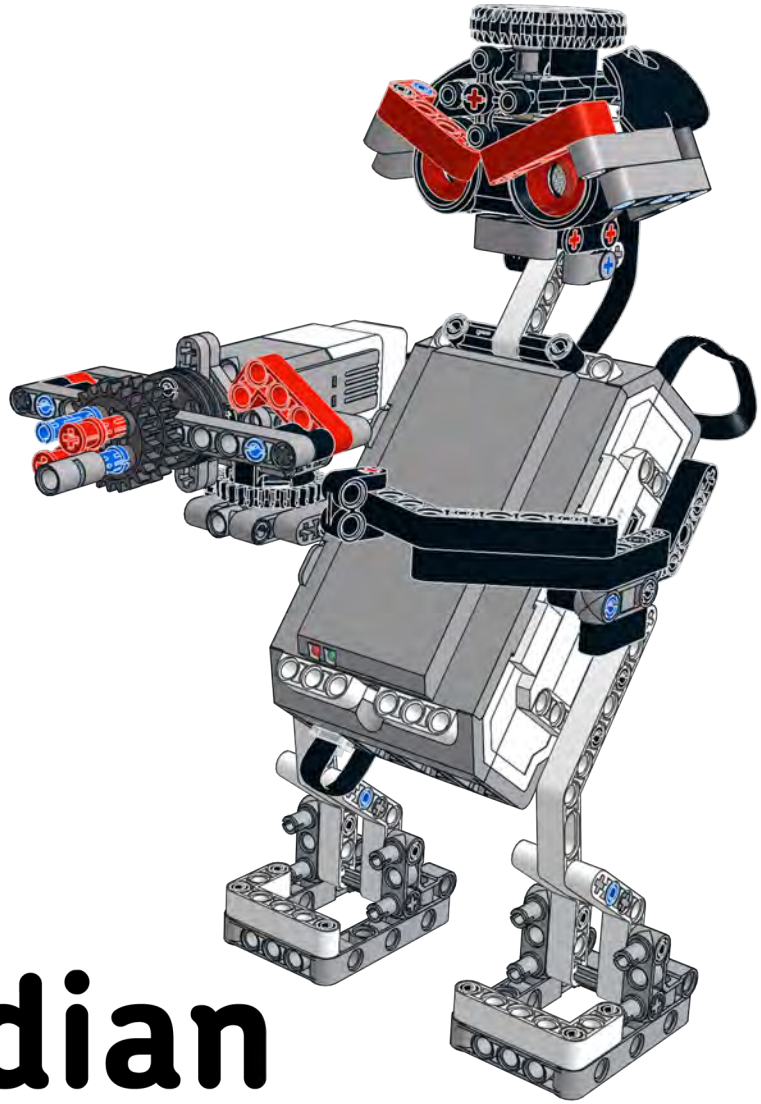

Desk Guardian

Daniele Benedettelli - June 2012

Build it with the
EV3 core set #45544

1

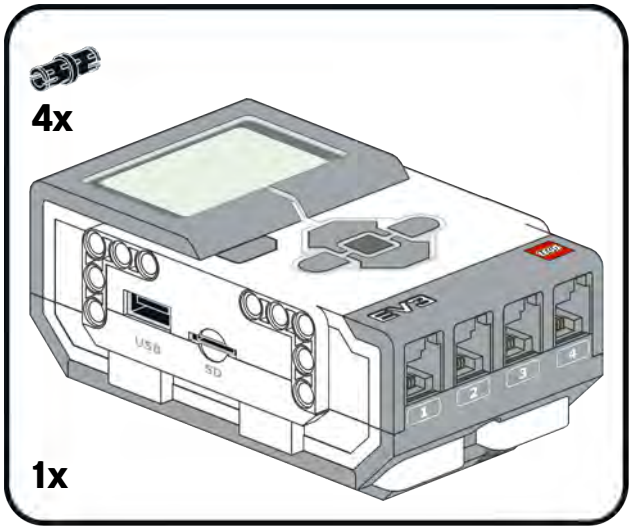

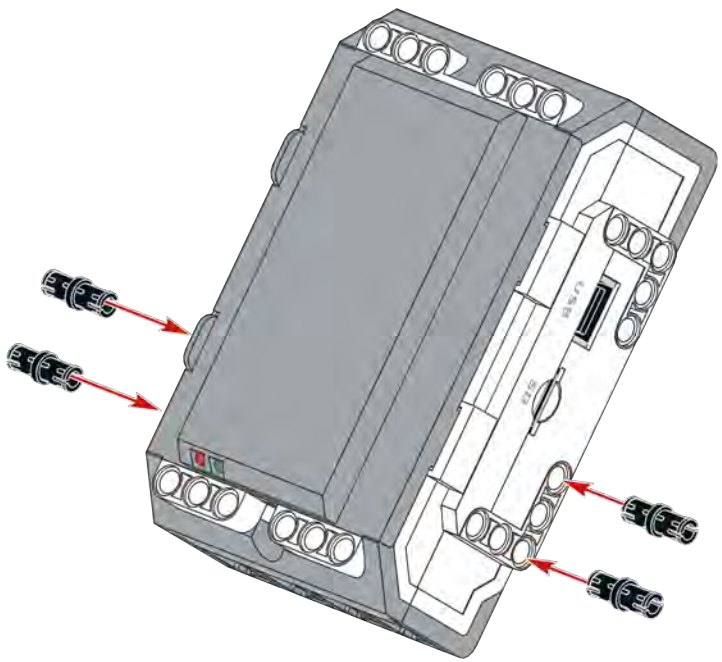

2

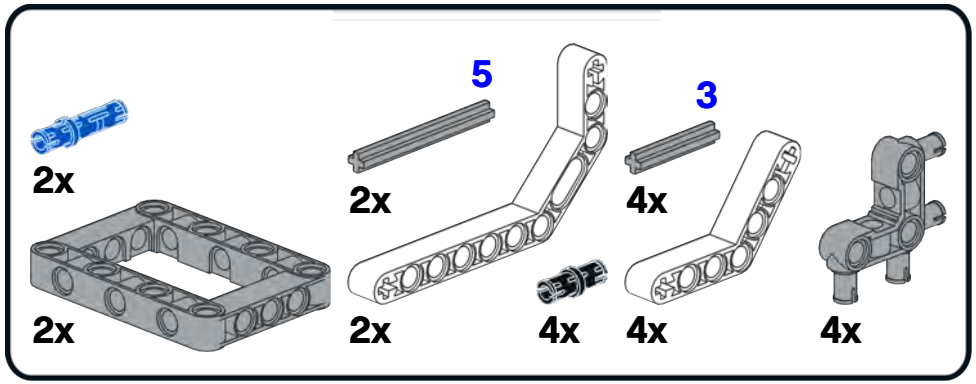

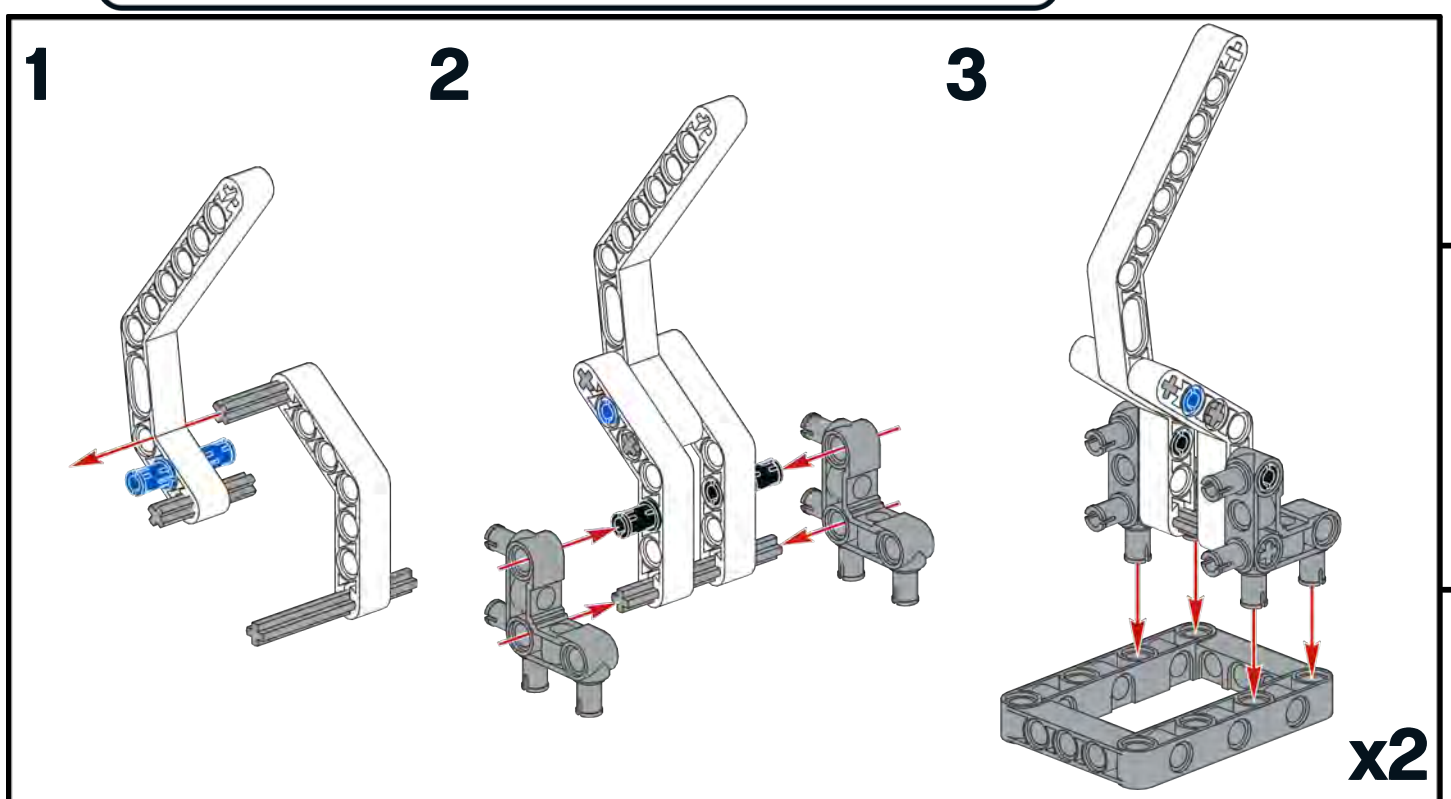

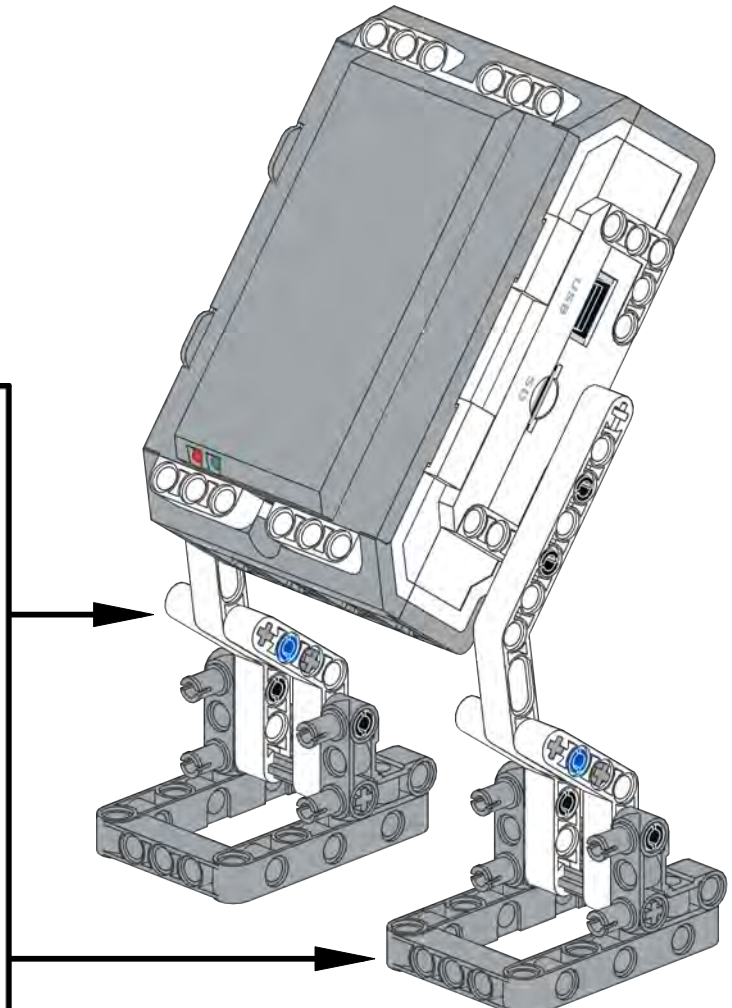

3

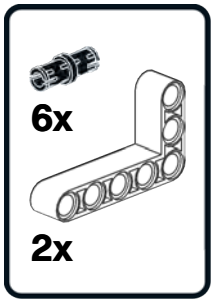

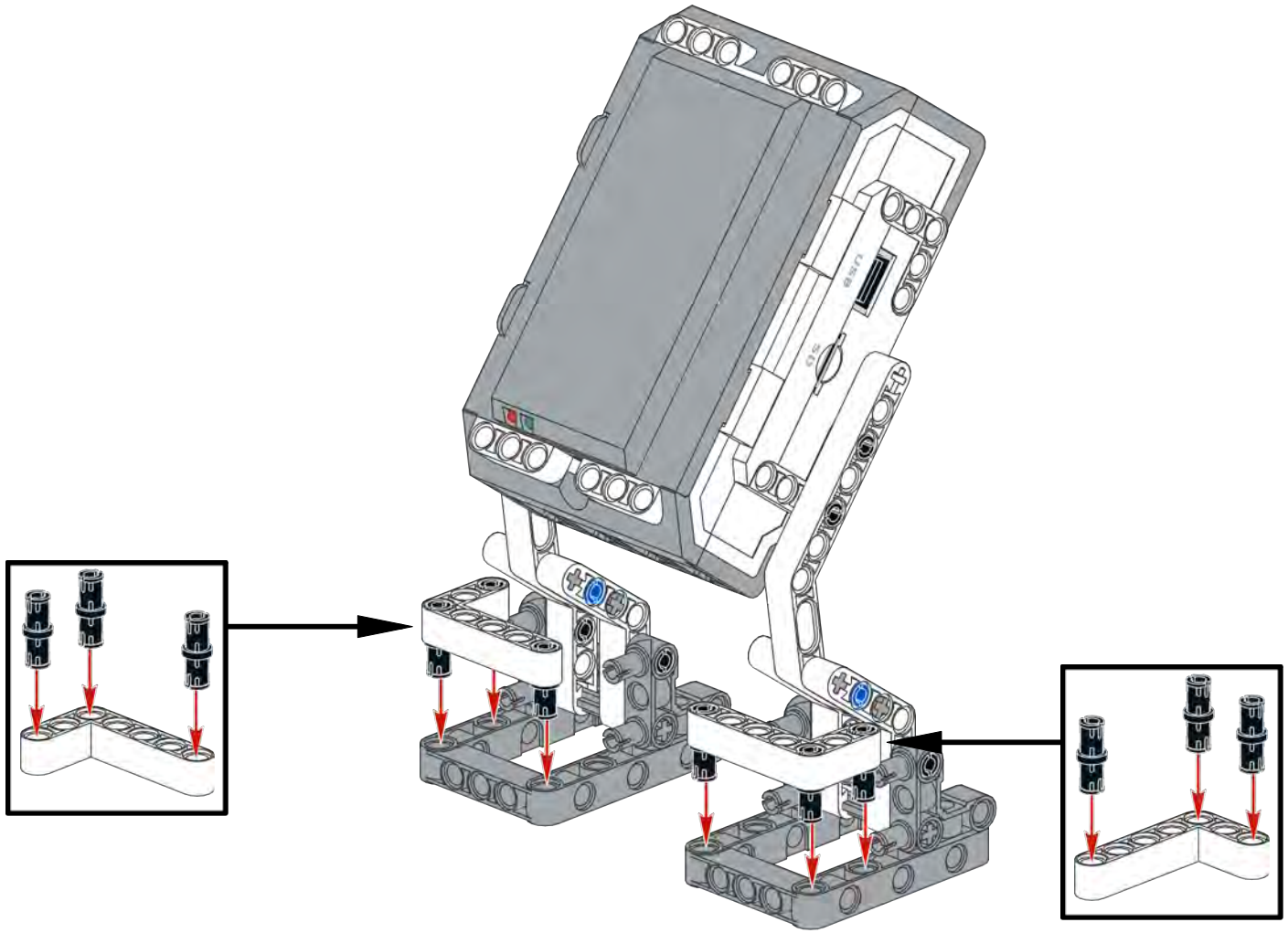

1

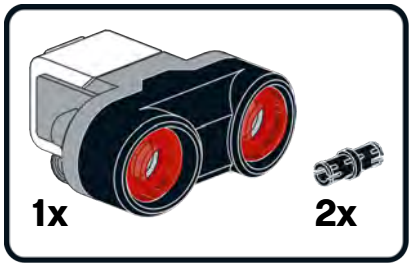

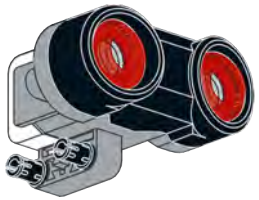

2

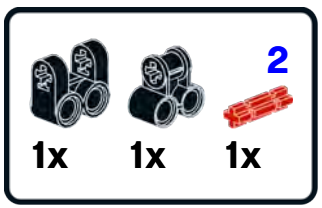

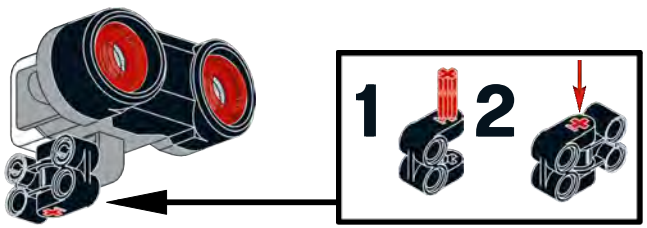

3

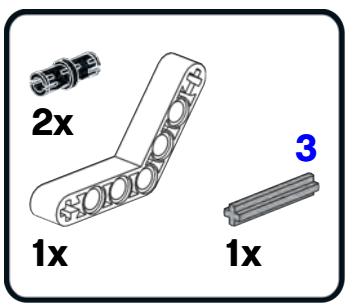

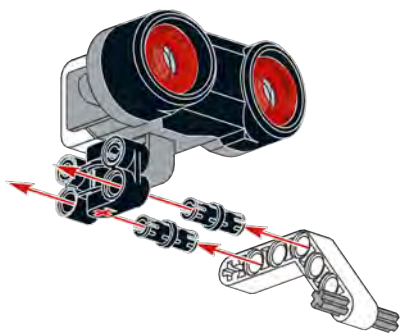

4

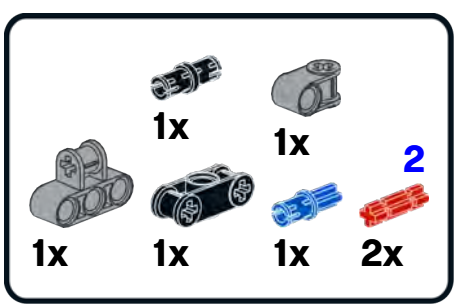

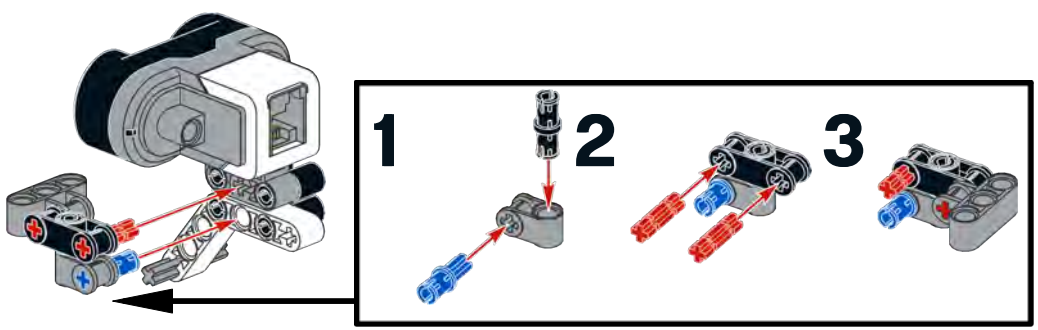

5

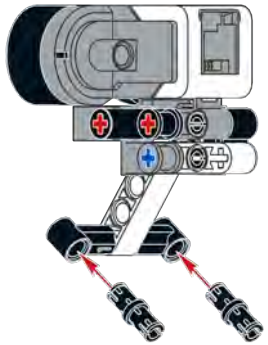

6

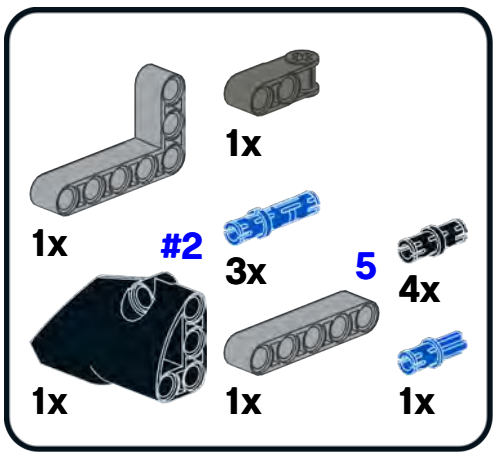

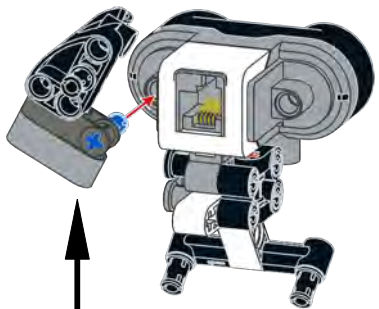

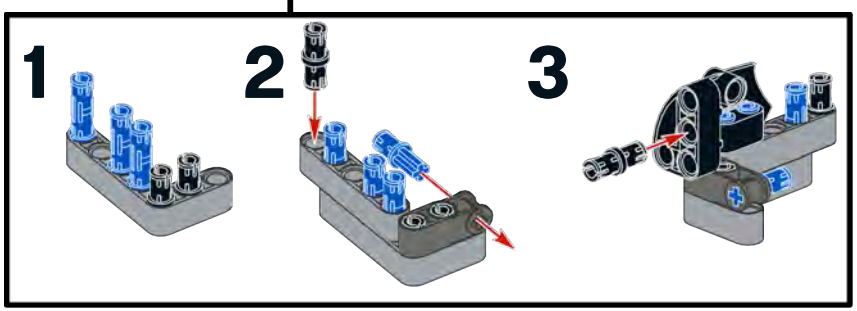

7

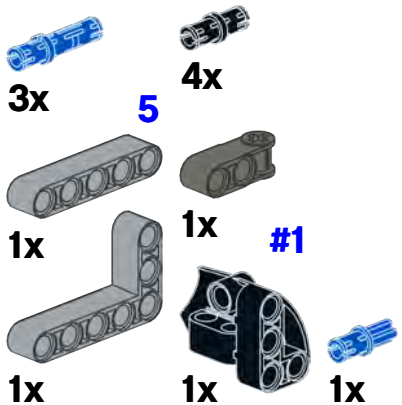

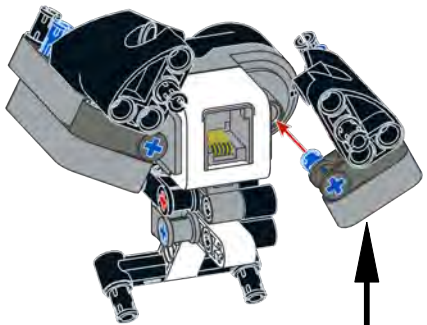

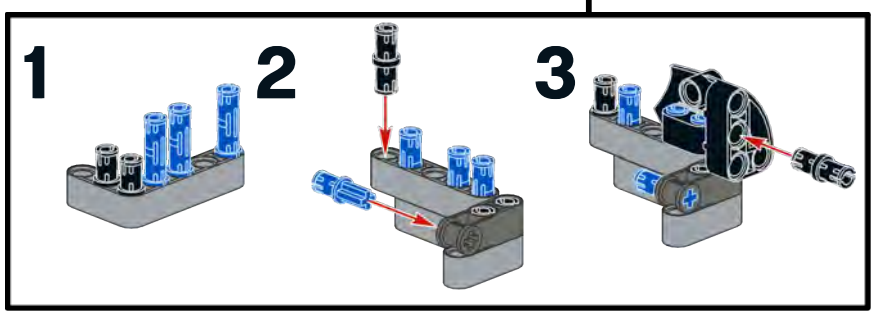

8

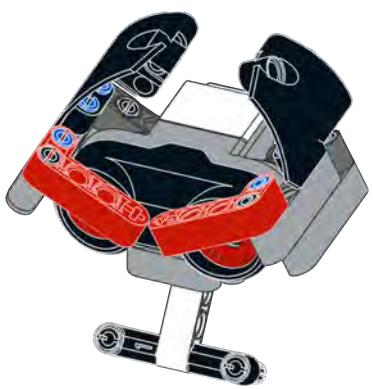

9

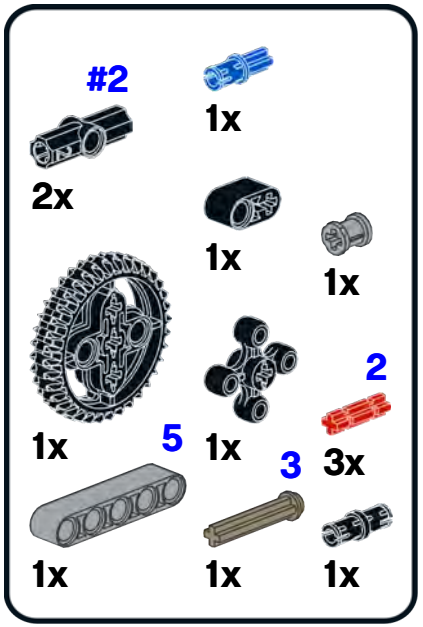

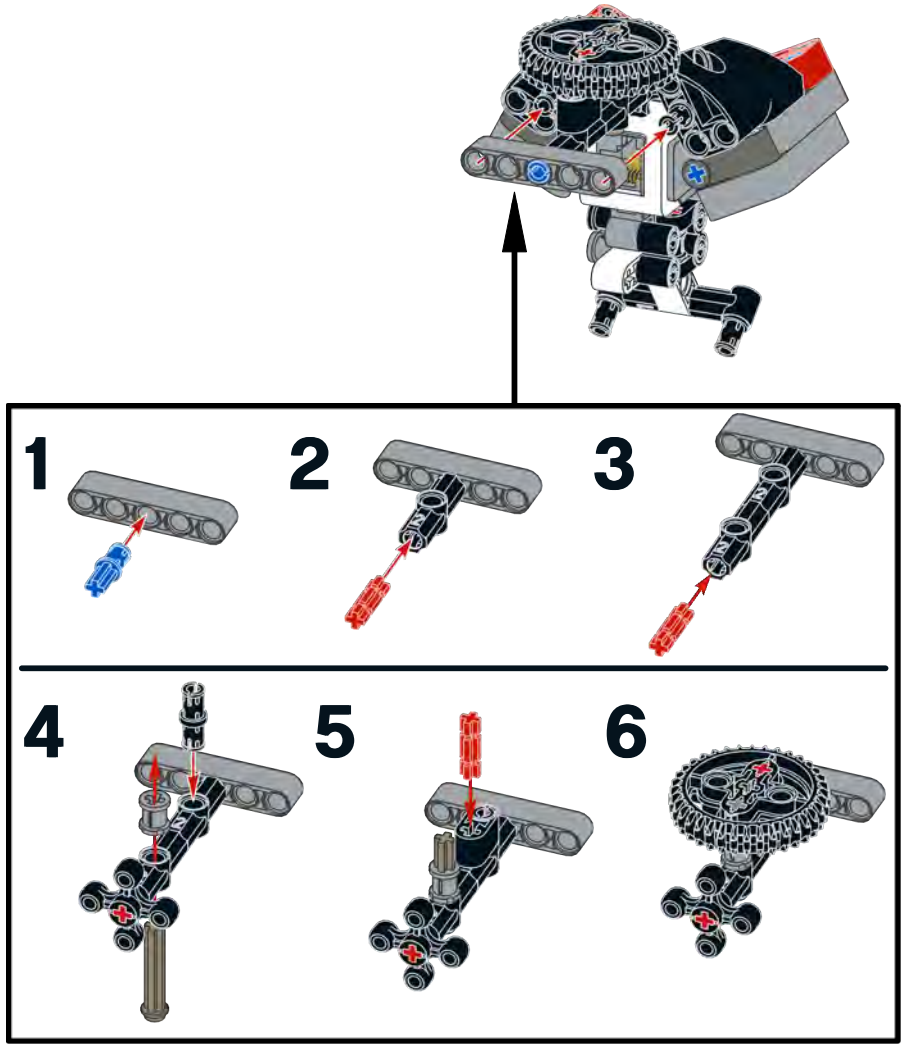

4

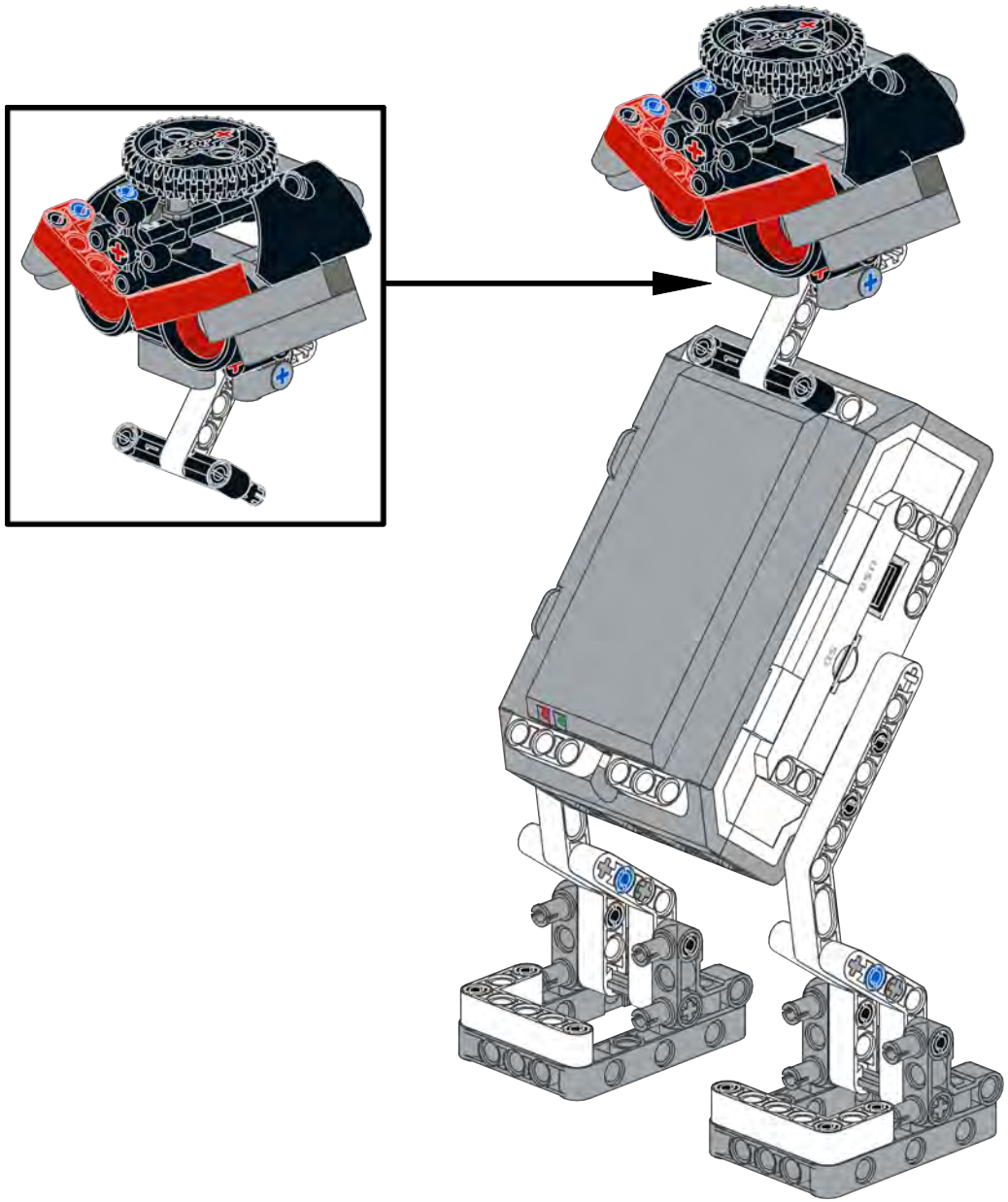

1

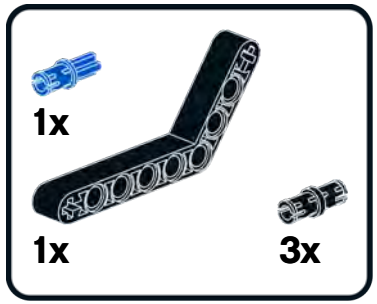

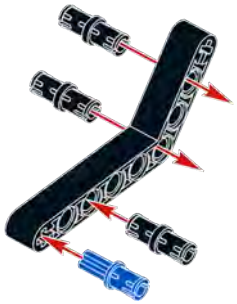

2

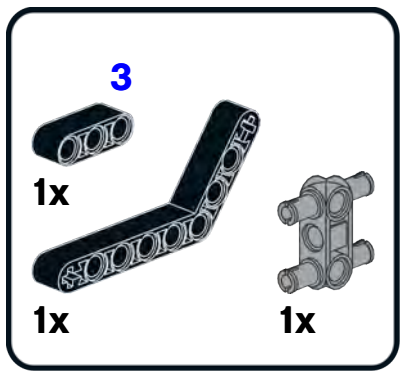

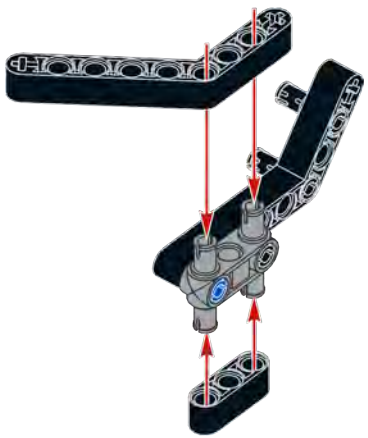

3

4

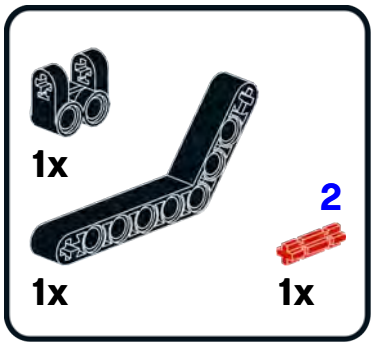

5

5

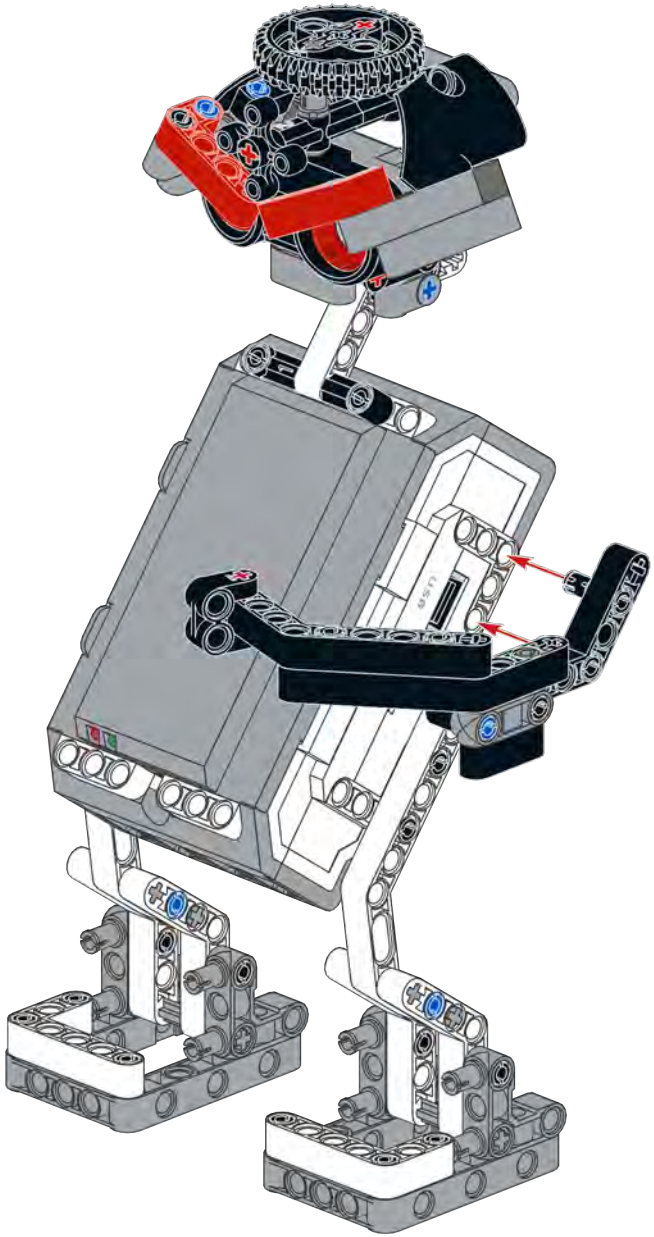

1

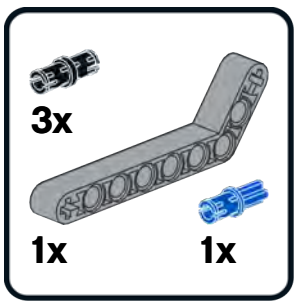

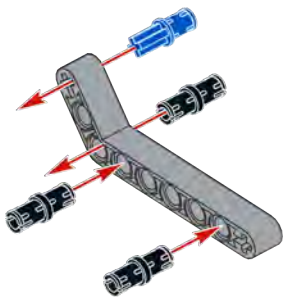

2

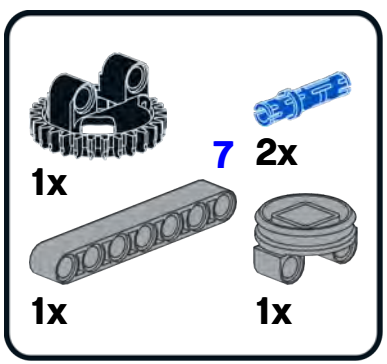

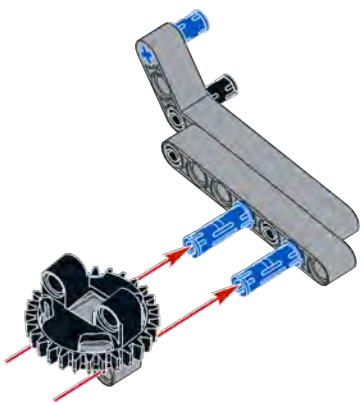

3

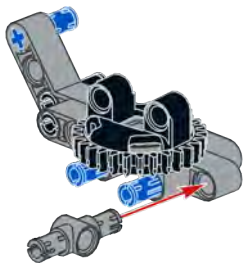

4

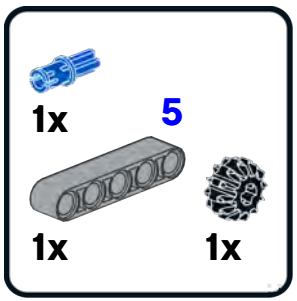

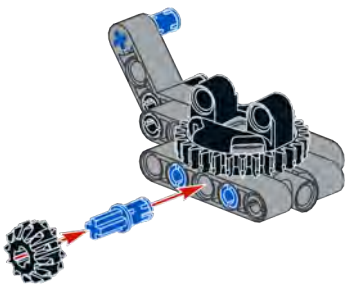

5

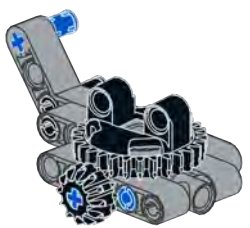

6

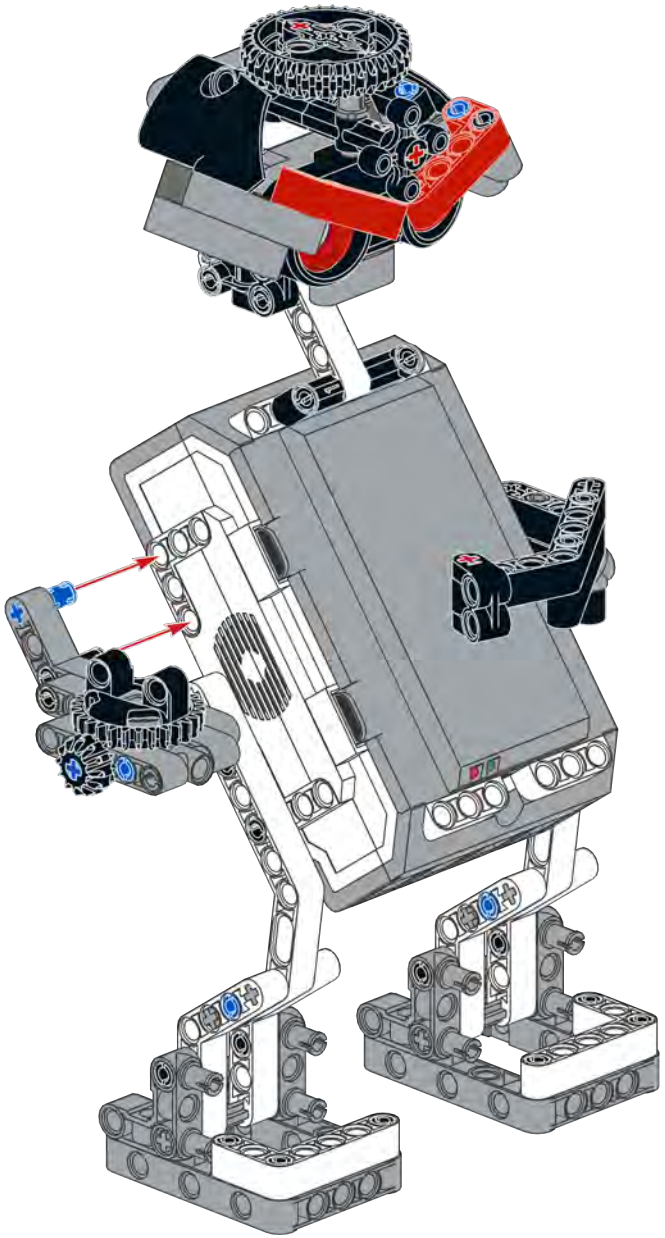

1

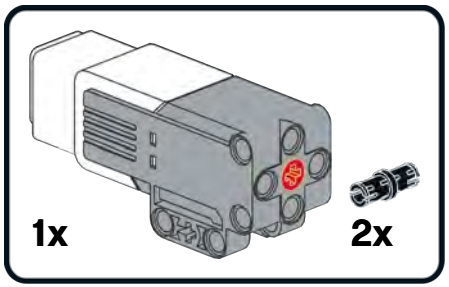

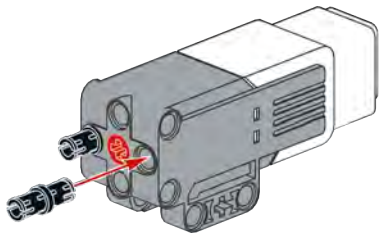

2

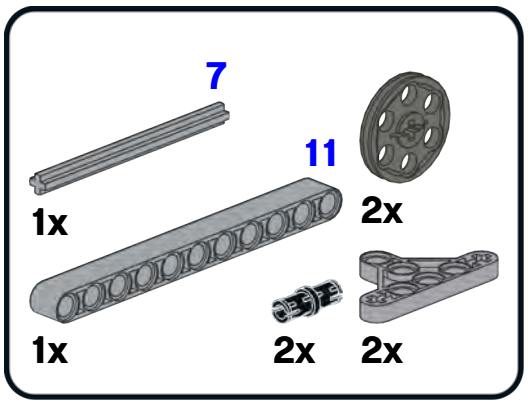

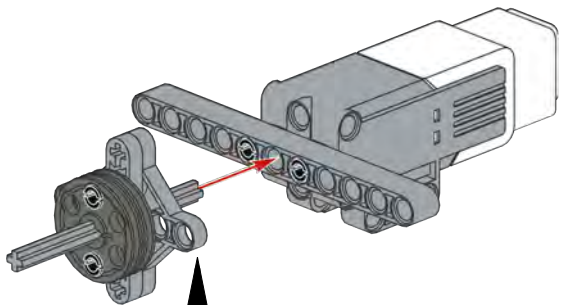

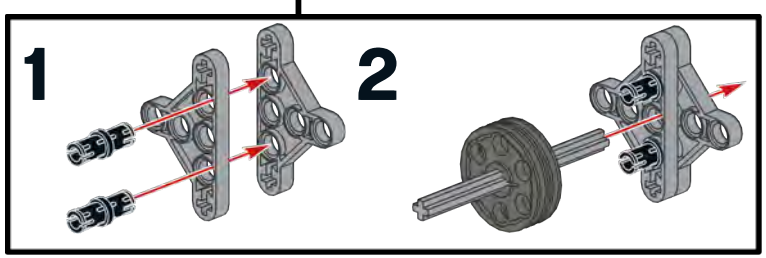

3

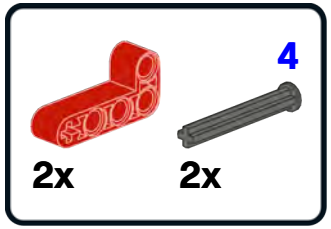

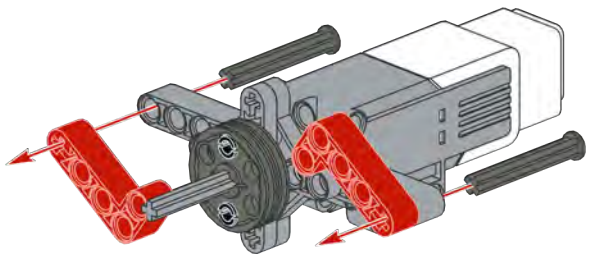

4

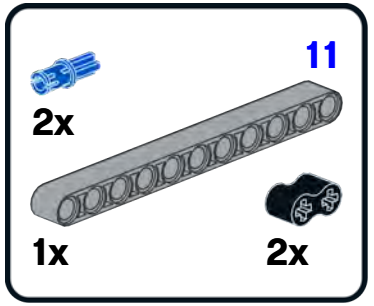

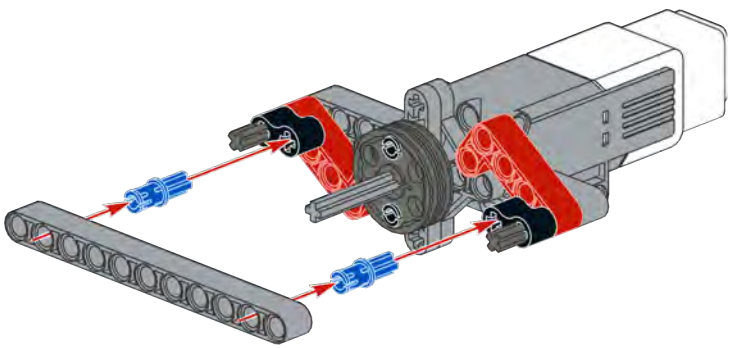

5

1x

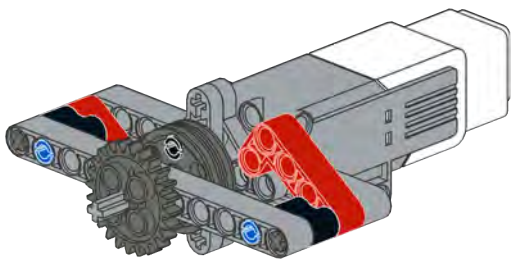

6

1x

1x

1x

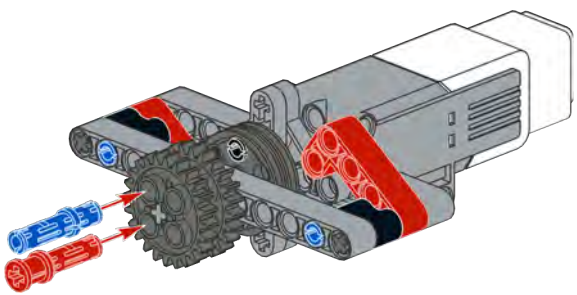

7

2x

2x

1x

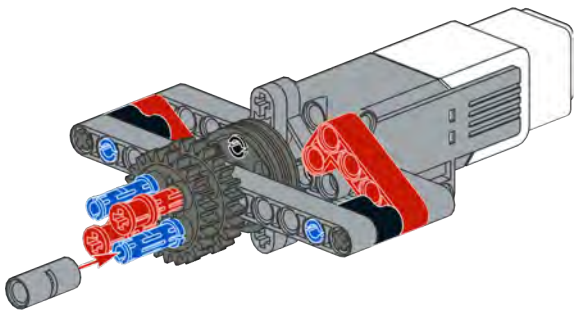

8

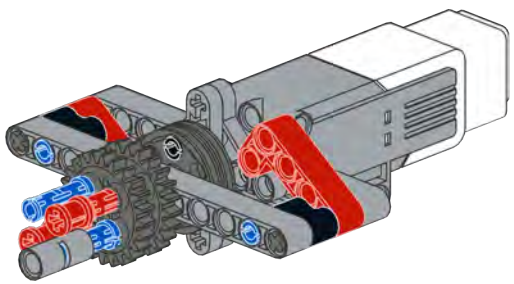

7

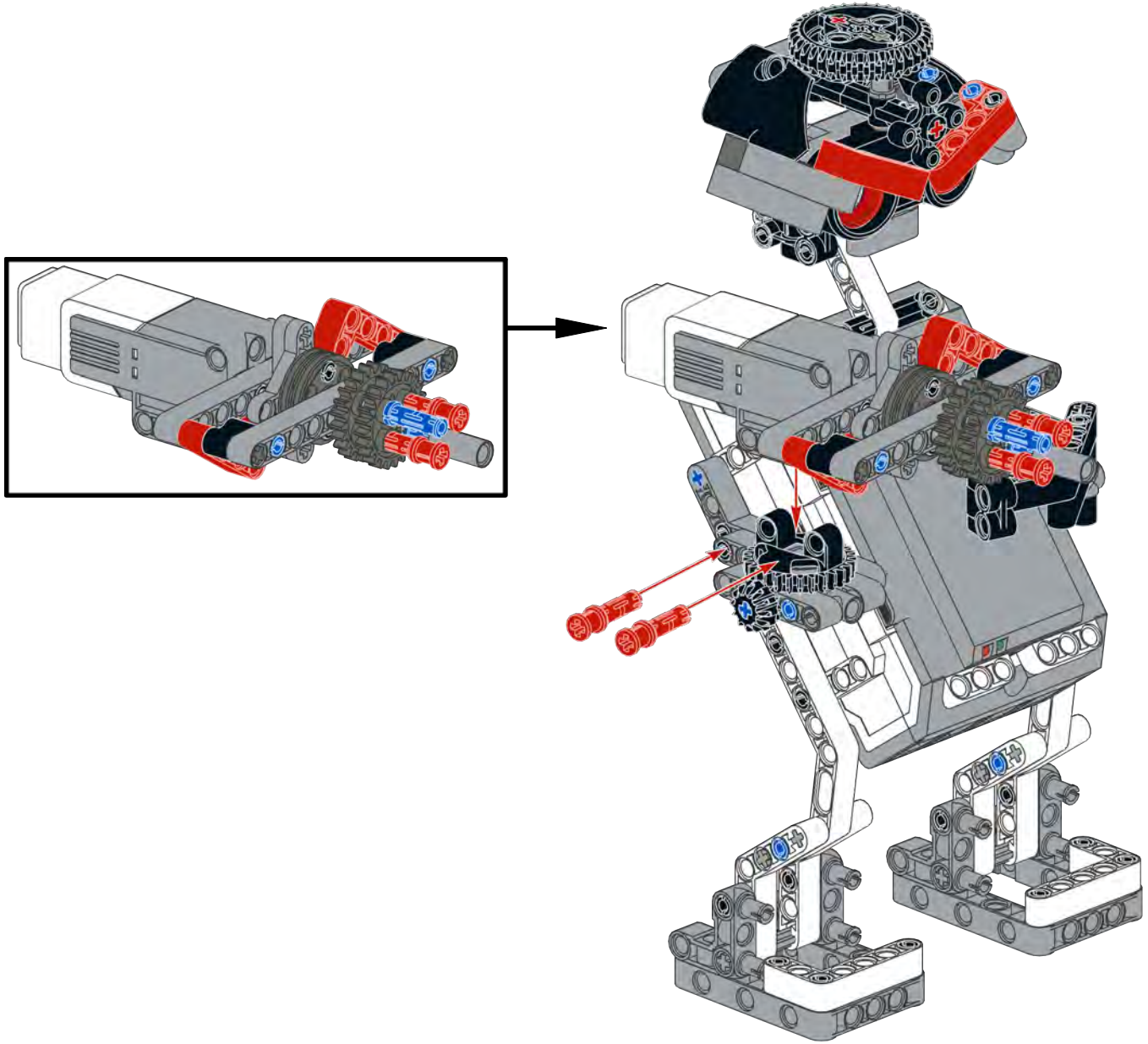

8

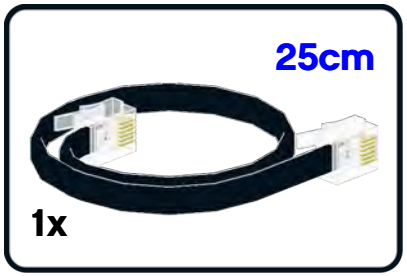

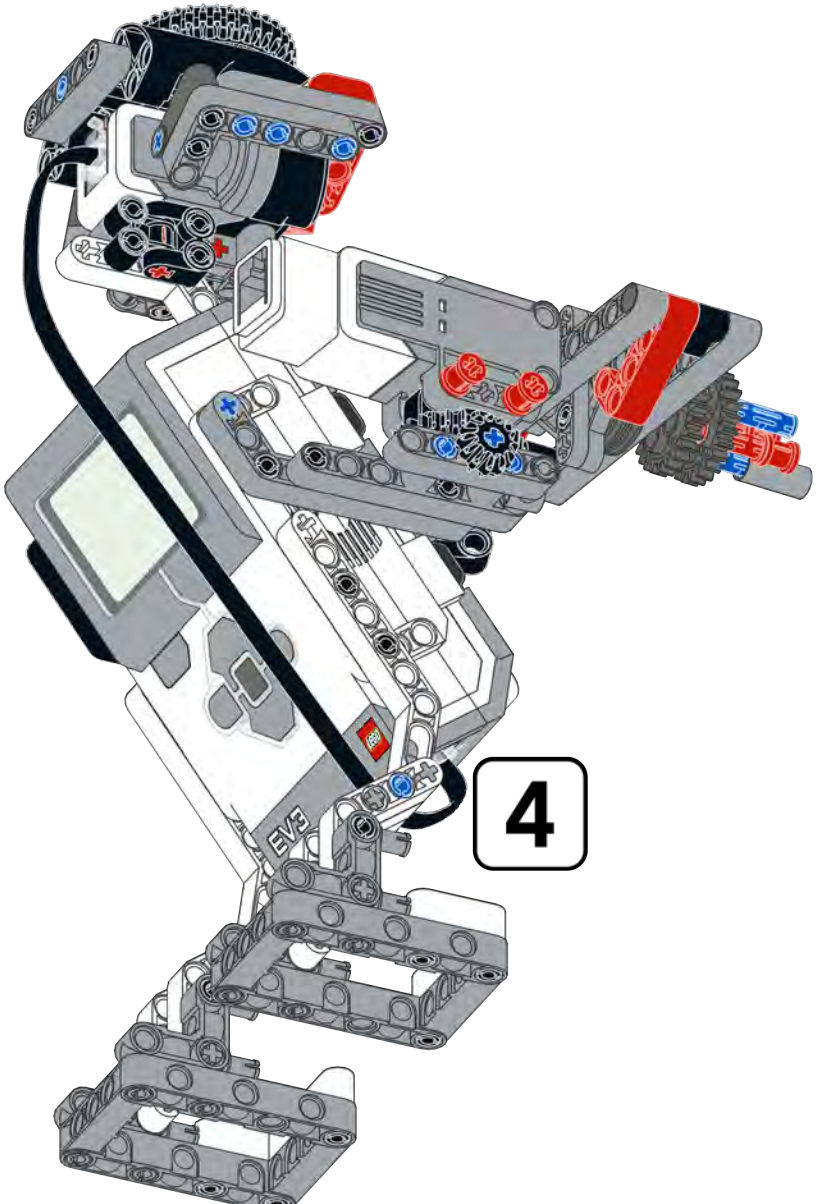

9

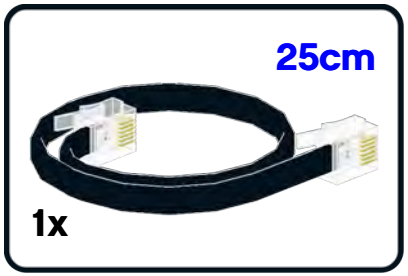

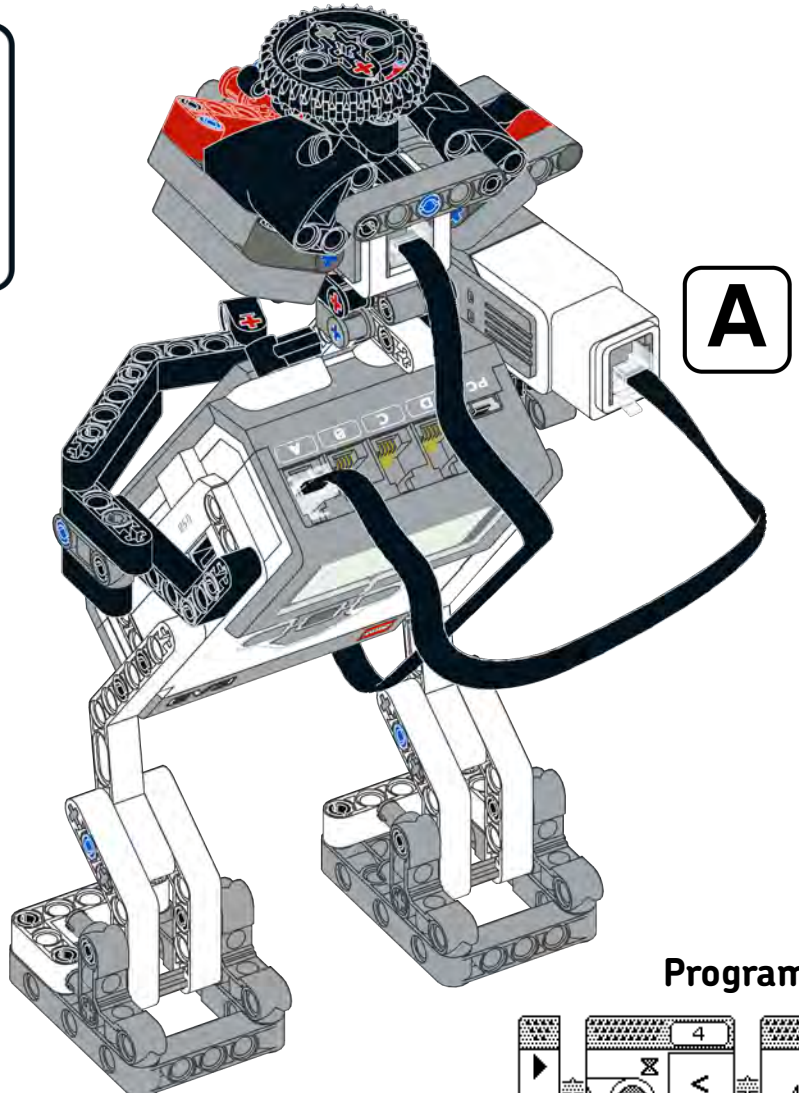
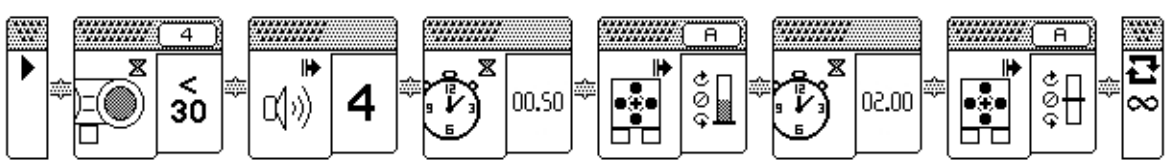
Program the robot using the EV3 Brick Program App